# INSTALLATION INSTRUCTIONS CORNER GUARD SYSTEMS 2 HOUR RATING CGR-2S2, -3S2, -2R2, -3R2, 1352

STORAGE, HANDLING & ENVIRONMENTAL CONDITIONS:

1. All materials shipped unassembled. Store vertically or on flat horizontal surface.
2. Begin installation only after finish construction has been completed and building interior has been within temperature range intended for continued use for at least 24 hours. Cut vinyl and aluminum components to fit only after they have been at temperature intended for continued use for 24 hours.

INSTALLATION:

1. Obtain code official's approval for rating required for project.
2. Field-verify that partition conforms with construction documents and codes having jurisdiction.
3. Install AASI fire barrier. Install with face containing integral wire mesh exposed. Align top edge of fire barrier with reference point "A" (see Standard Isometric Detail). Install fire barrier so that it completely covers substrate (i.e., gypsum board layer directly under fire barrier). Use #6 type S buglehead sheet metal screws at each factory-drilled hole to secure barrier directly to steel studs.
4. Field-verify exact retainer lengths for height of wall or partition.
5. Install retainers. Moisten inside of aluminum base molding with spray lubricant to facilitate installation of aluminum base molding, and slide onto one end of aluminum retainer. This end will sit on floor. Secure retainer to wall or partition with fasteners inserted through factory-drilled holes in retainer legs. For most drywall applications, we recommend #6 drywall screws, fastened through gypsum board to studs.
6. Install cover. Field-verify that cover lengths fit exactly between top of aluminum base molding and top of system, as shown or specified. Use one continuous length of vinyl acrylic cover per corner. Secure to retainer by hooking over lip on one retainer leg and snapping over lip on other retainer leg.
7. Cleaning: use mild detergent to clean soiled surfaces. Do not use powdered cleansers, as they may leave a residue on cover surface.
8. Use mild detergent to clean soiled surfaces. Do not use powdered cleansers, as they may leave a residue embedded in the cover surface. Wall wear protection systems are made from high impact, stain resistant vinyl acrylic. Pen marks, paint and graffiti generally wash off easily with mild soap and water. Wall wear wall protection systems can also withstand commercial cleaners without fading or staining. Antimicrobial additives prevent mildew and bacteria growth to help keep sanitary environments clean.

Babcock-Davis®
Always right there.

**9300 73rd Avenue North**
**Brooklyn Park, MN 55428**

# PARTS LIST
## CGR-2S2.-3S2,-2R2,-3R2,-1352

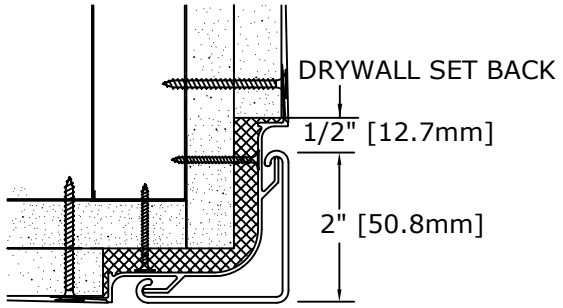


## CGR-2S/2

TWO HOUR FIRE BARRIER -FB303
ALUMINUM RETAINER - #A040
VINYL ACRYLIC COVER #V106
ALUM. BASE MOLDING - #A027

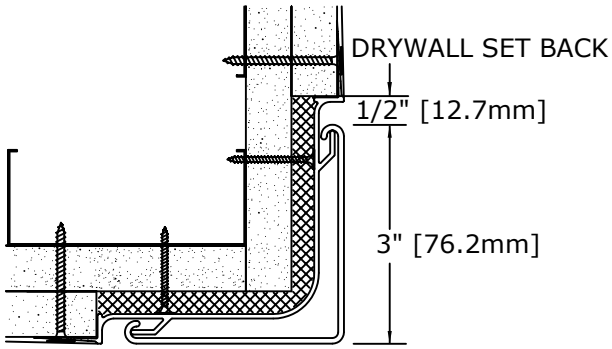


## CGR-3S/2

TWO HOUR FIRE BARRIER - #FB304
ALUMINUM RETAINER -#A041
VINYL ACRYLIC COVER - #V107
ALUM. BASE MOLDING - #A028

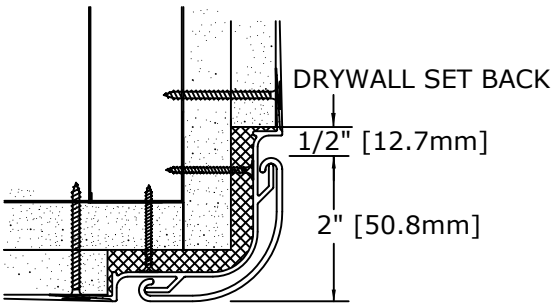


## CGR-2R/2

TWO HOUR FIRE BARRIER - #FB303
ALUMINUM RETAINER - #A040
VINYL ACRYLIC COVER - #V108
ALUM. BASE MOLDING - #A029

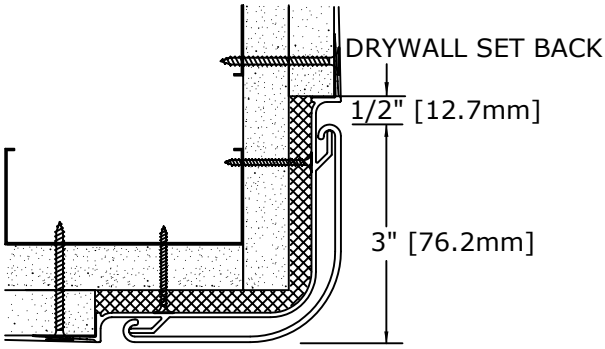


## CGR-3R/2

TWO HOUR FIRE BARRIER - #FB304
ALUMINUM RETAINER - #A041 VINYL
ACRYLIC COVER - #V109
ALUM. BASE MOLDING - #A030

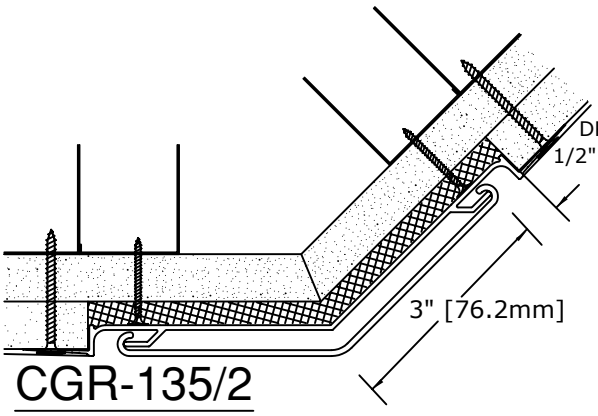


## CGR-135/2

TWO HOUR FIRE BARRIER -#FB305
ALUMINUM RETAINER - #A042
VINYL ACRYLIC COVER - #V110
ALUM. BASE MOLDING. - #A031

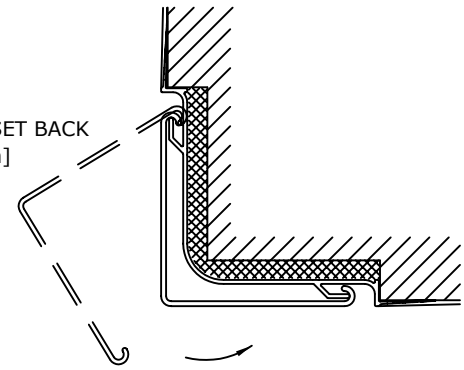

## COVER INSTALLATION

1. HOOK OVER ONE RETAINER LIP.
2. ROTATE SIDEWARD, PUSHING FIRMLY TO SNAP OVER OTHER RETAINER LIP.

Babcock-Davis®
Always right there.

**9300 73rd Avenue North**
**Brooklyn Park, MN 55428**

# TYPICAL ASSEMBLY DRAWING
# CGR-2S2.-3S2,-2R2,-3R2,-1352

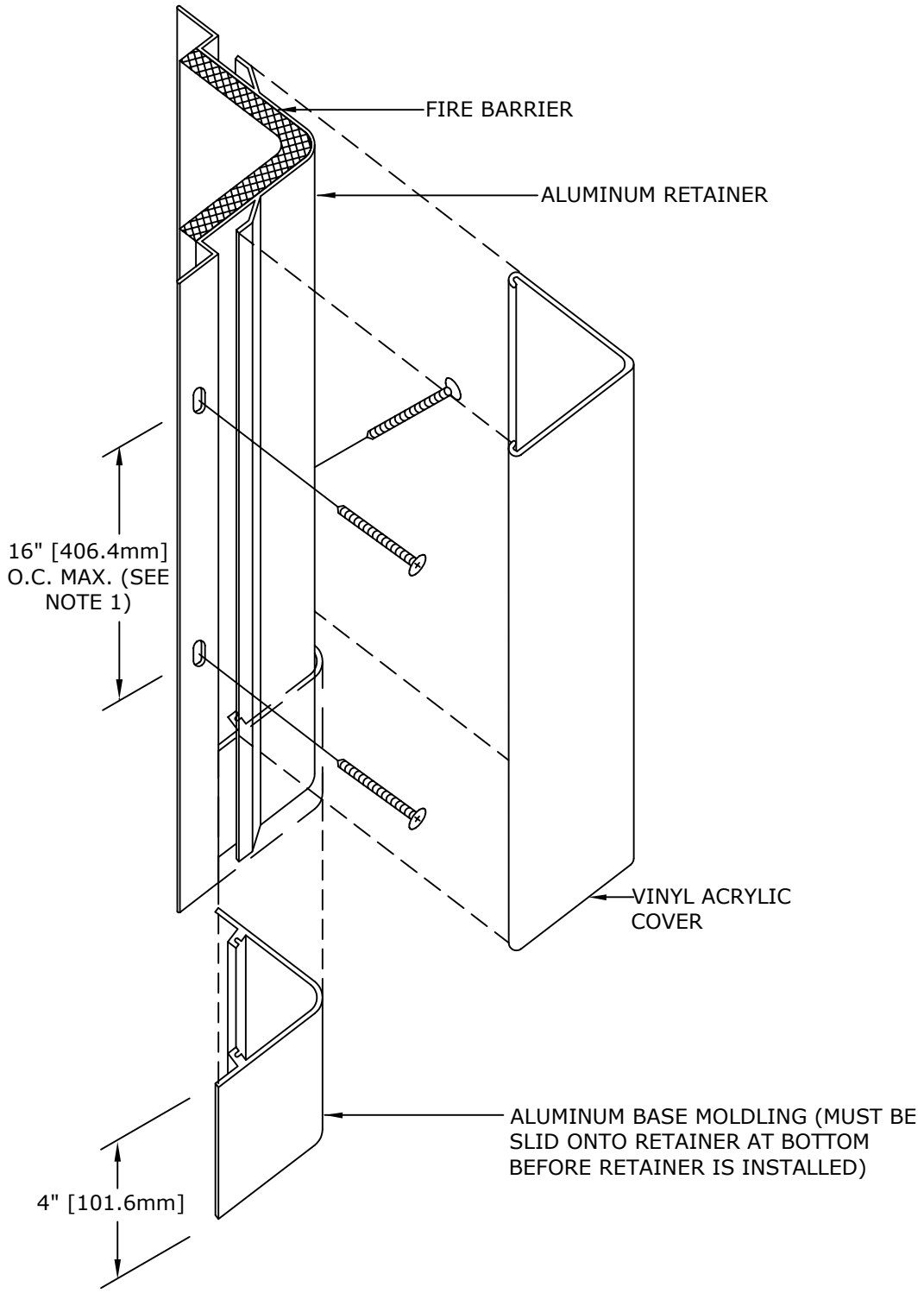


NOTES:

1. FACTORY-DRILLED FASTENER HOLES ON RETAINER LEGS ARE STAGGERED 8" [203.2mm] O.C. MAX. (HOLES ON EACH LEG ARE SPACED 16" [406.4mm] O.C. MAX.)

Babcock-Davis®
Always right there.

**9300 73rd Avenue North**
**Brooklyn Park, MN 55428**

# STANDARD ISOMETRIC DETAIL
## CGR-2S2, -3S2, -2R2, -3R2, -1352

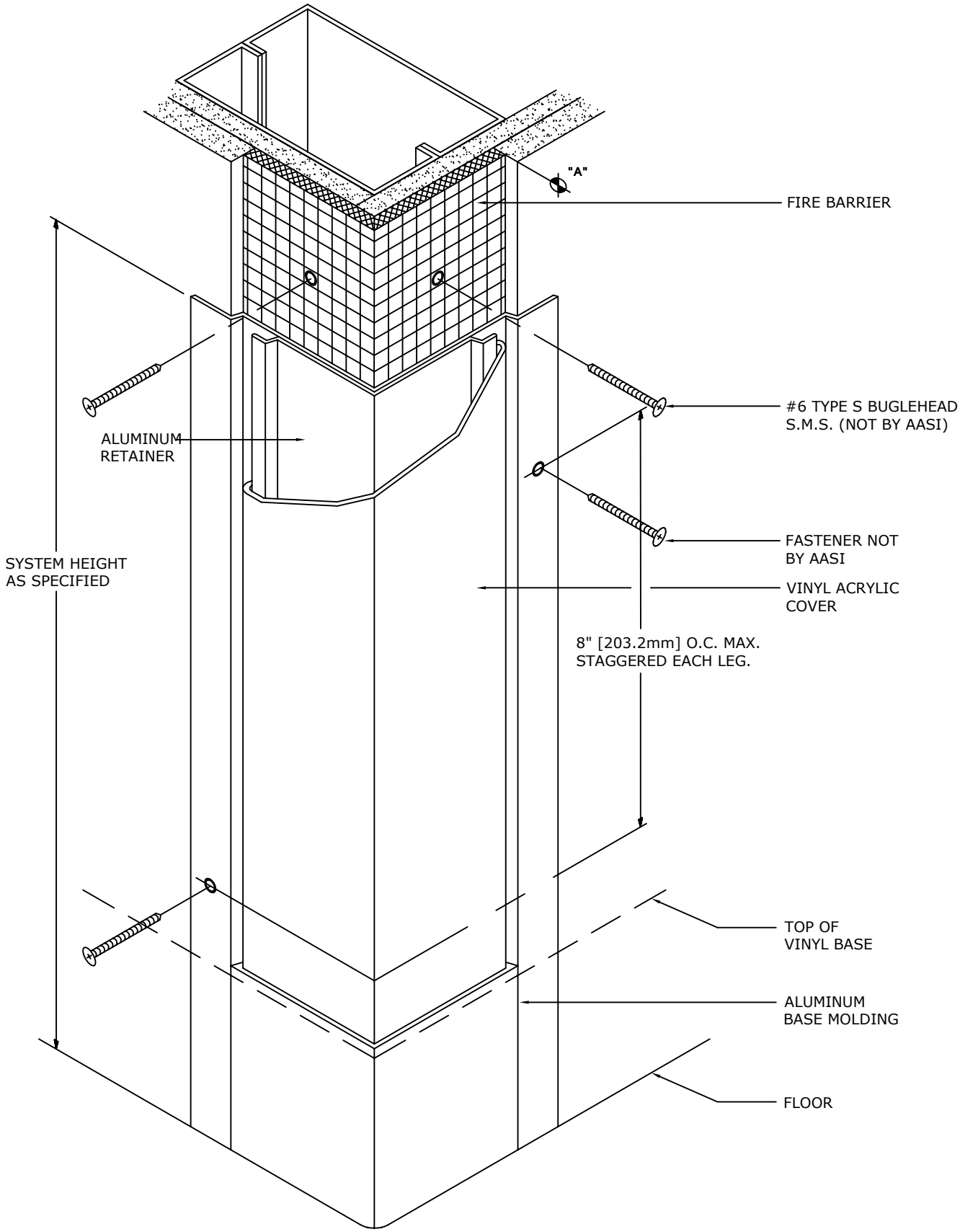


Babcock-Davis®
Always right there.

9300 73rd Avenue North
Brooklyn Park, MN 55428

# PLAN VEIW
# CGR-2S2, -3S2, -2R2, -3R2, 1352
# (CGR-3S2 SHOWN)

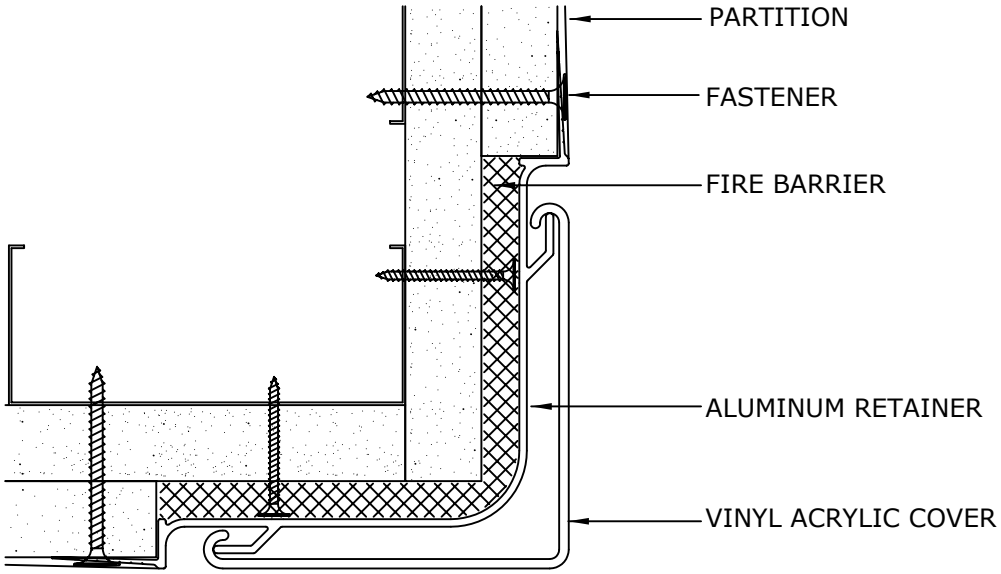


NOTES:

1. REFER TO INSTALLATION INSTRUCTIONS AND DETAIL SHEETS FOR MORE INFORMATION, INCLUDING PART NUMBERS.

IMPORTANT: USER SHALL VERIFY CONFORMANCE OF ALL CONSTRUCTIONS SHOWN WITH LOCAL CODES AND WITH REQUIREMENTS OF METAL STUD MANUFACTURER FOR RATINGS. FASTENERS AND PARTITION COMPONENTS NOT BY ARDEN ARCHITECTURAL SPECIALTIES, INC.

## TYPICAL FASTENING CONDITIONS SHOWN BELOW

### 2 LAYERS GYP. BD.

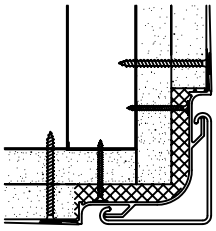

#6 x 2"
DRYWALL SCREW

QTY:

### GYP. BD. & MASONRY

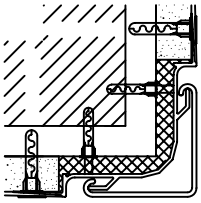

#6 X 1-1/2" S.M. SCREW AND TYPE AF5 ALLIGATOR ANCHORS BY MECHANICAL PLASTICS

QTY:

SPECIFICATION:

GENERAL: FURNISH AND INSTALL CORNER GUARD SYSTEM(S) BY ARDEN ARCHITECTURAL SPECIALTIES, INC., AS SHOWN AND SPECIFIED.

INSTALLATION: SECURE TO WALL OR PARTITION IN ACCORDANCE WITH MANUFACTURER'S PRINTED INSTRUCTIONS. USE FASTENERS DESIGNED AND APPROVED FOR PURPOSE INTENDED, SPACED 8 INCHES [203.2mm] O.C. MAX. STAGGERED EACH LEG OF RETAINER. INSTALL IN ACCORDANCE WITH ALL CODES HAVING JURISDICTION.

Babcock-Davis®
Always right there.

**9300 73rd Avenue North**
**Brooklyn Park, MN 55428**