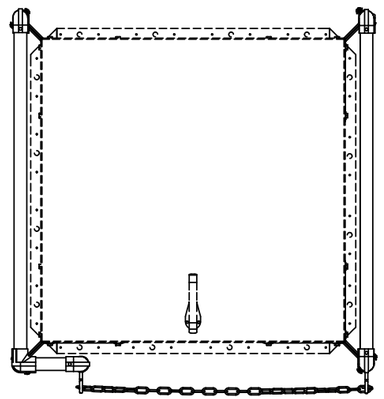

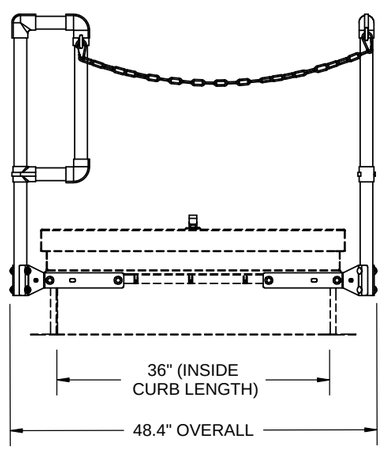

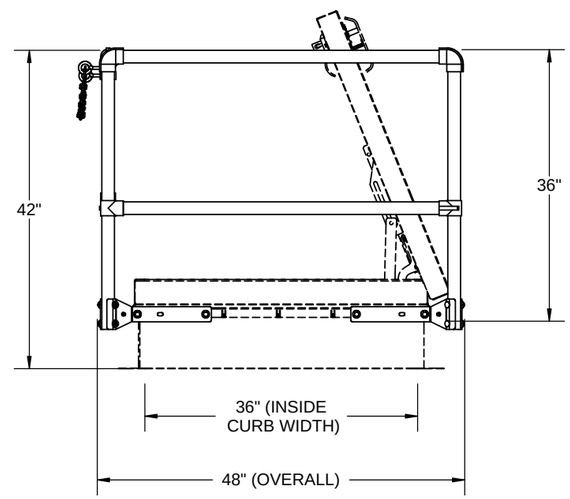

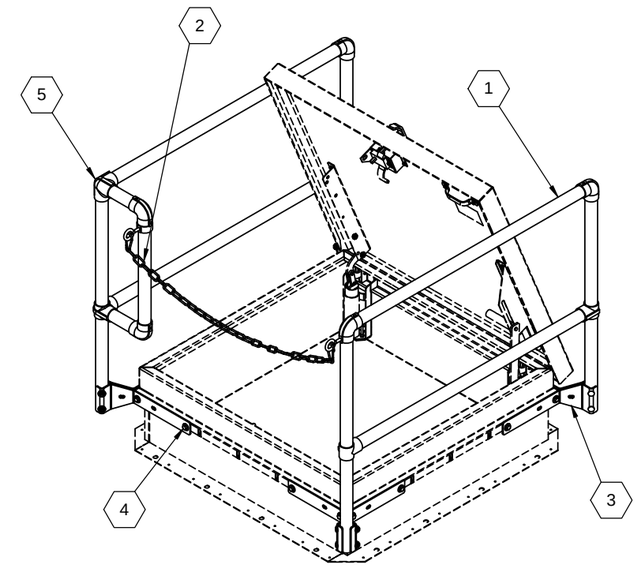

HATCH SHOWN FOR
ILLUSTRATION
PURPOSES ONLY

SPECIFICATIONS

1. RAILS, POSTS: GALVANIZED PIPE 1 1/4" I.D. SCH 40 A53 GRADE B SEAMED STEEL
2. CHAIN: ZINC PLATED WITH SPRING CLIPS
3. COUNTERFLASH MOUNTING BRACKETS: 3/16" ZINC PLATED STEEL FASTENED TO STEEL BACKING PLATE
4. BOLTS: HEX HEAD BOLTS 3/8"-16 x 3/4" GRADE 5 ZINC PLATED
5. RAILING FITTINGS AND PLUGS: MANUFACTURER'S STANDARD CAST WITH SET SCREW HOLD

FITS HATCH SIZES UP TO 36" X 36", FOR SMALLER HATCH SIZES CUT RAILS TO LENGTH IN FIELD

CERTIFICATIONS: MEETS OSHA 29 CFR 1910.23 GUARDING FOR OPENINGS REQUIREMENTS; SUPPORTS 200 LBS. FORCE

SRCG36X36FC

Babcock-Davis®
Always right there.
9300 73rd Avenue North
Brooklyn Park, MN 55428

TITLE: Safety Railings for Roof Hatch 36X36, Front Exit, Steel, Galvanized, Chains

	NAME	DATE
DRAWN	DKL	8/7/09
RELEASED	-	-

SIZE	DWG. NO.	REV
B	SRCG36X36FC	A

WEIGHT: 438.53 SHEET 1 OF 2

PROPRIETARY AND CONFIDENTIAL: THE INFORMATION CONTAINED IN THIS DRAWING IS THE SOLE PROPERTY OF BABCOCK-DAVIS. ANY REPRODUCTION IN PART OR AS A WHOLE WITHOUT THE WRITTEN PERMISSION OF BABCOCK-DAVIS IS PROHIBITED.

ITEM NO.	PART NUMBER	DESCRIPTION	QUANTITY
10	27258-6.00	RAIL, 1-1/4" X 6.00L,	2
20	27258-18.00	RAIL, 1-1/4" X 18.00L,	1
30	27258-43.75	RAIL, 1-1/4" X 43.75L,	4
40	1985-36.00	CHAIN, SAFETY, STL, ZPS	1
500	27180	PKG, CORNER POST, ZPS,	4
510	27185	FTG, ELBOW,	5
515	27188	FTG, TEE,	3
520	27186	FTG, CROSS ELBOW,	1
525	27231	FTG, DBL TEE,	1
535	27260	BOLT, LIFTING EYE, 3/8-16,	2
540	27266	SPRING, CLIP 2, ZINC	2
545	27261	FTG, No. 78 SHORT COLLAR,	1

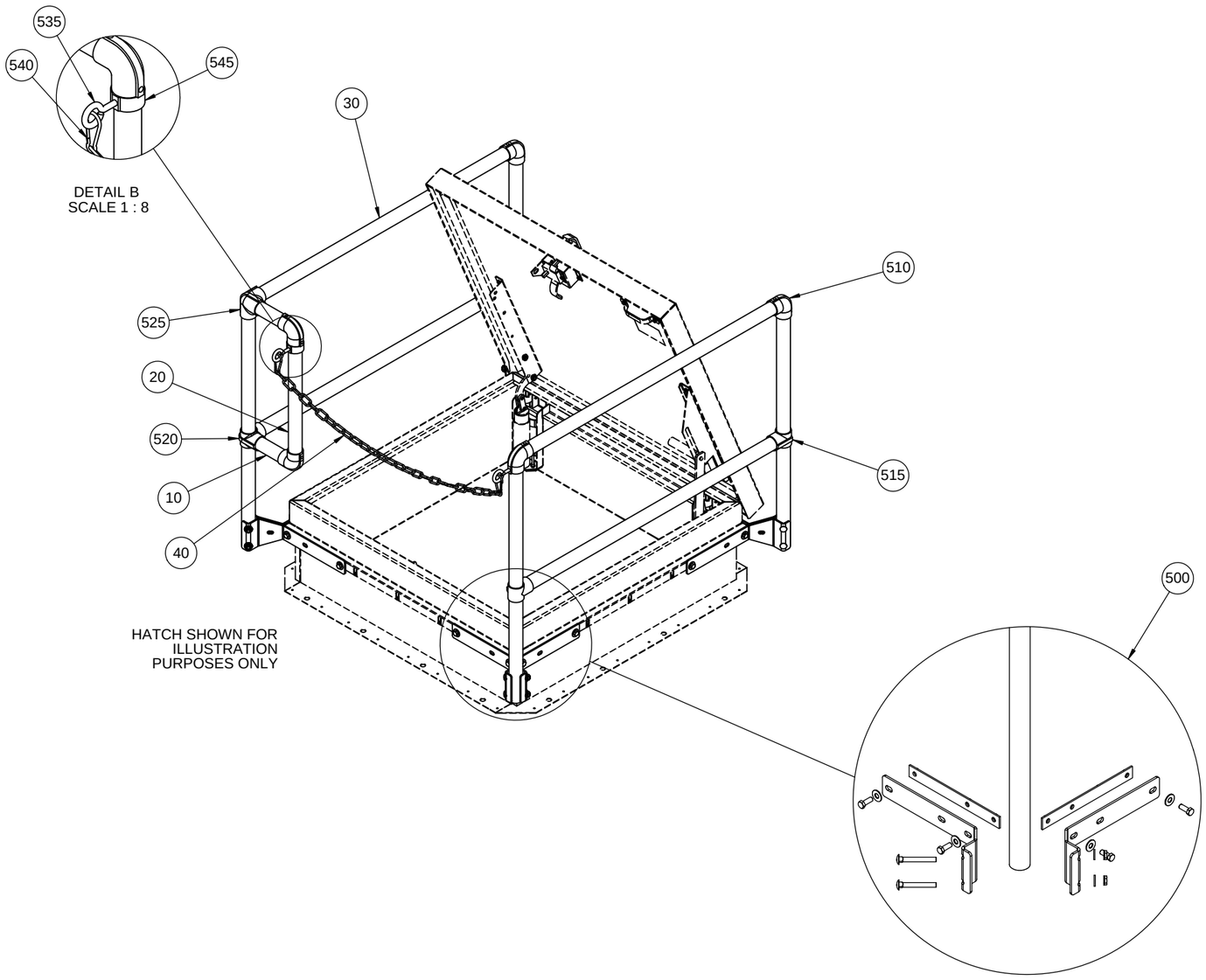

SRCG36X36FC

Babcock-Davis®
Always right there.
9300 73rd Avenue North
Brooklyn Park, MN 55428

TITLE: Safety Railings for Roof Hatch 36X36, Front Exit, Steel, Galvanized, Chains

	NAME	DATE
DRAWN	DKL	8/7/09
RELEASED	-	-

SIZE: B
DWG. NO.: SRCG36X36FC
REV: A
WEIGHT: 438.53
SHEET 2 OF 2

PROPRIETARY AND CONFIDENTIAL: THE INFORMATION CONTAINED IN THIS DRAWING IS THE SOLE PROPERTY OF BABCOCK-DAVIS. ANY REPRODUCTION IN PART OR AS A WHOLE WITHOUT THE WRITTEN PERMISSION OF BABCOCK-DAVIS IS PROHIBITED.