Overview:
Floor Door products are designed and built for years of convenient and weather tight access for personnel as well as equipment. The following are general instructions for installing, operating and maintaining fire rated floor door products. These are recommended general guidelines only. Locally accepted installation, mounting, and sealing procedures should be followed to ensure the ultimate weather-ability and structural integrity of the floors installed into various types of floor systems.

Fire rated floor doors are fire tested by Intertek and labeled Warnock Hersey per NFPA 288, Standard Methods of Fire Tests of Floor Fire Door Assemblies Installed Horizontally in Fire Resistance Rated Floor Systems.

Fire rated floor doors are intended for interior, dry environments and applications with low humidity levels.

Do not store floor door outside. If storage is required, insure the floor doors properly covered and stored indoors.

Set Up/Unpack:
Warning
Floor Door covers are spring loaded. Ensure proper orientation prior to releasing slam latch. Do not release latch in upside down position.

- Orient the floor door in an upright position as shown. This is the correct position to handle the floor door.
- Visually inspect slam latch from the underside to ensure latch bolt is engaged over frame.
- Cut plastic tie wrap and remove envelope.

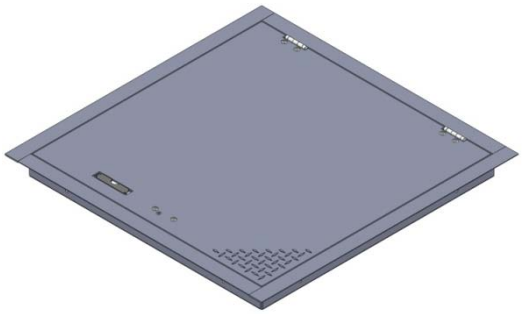

Floor Door in Upright Position

Installation in concrete-pour floor openings

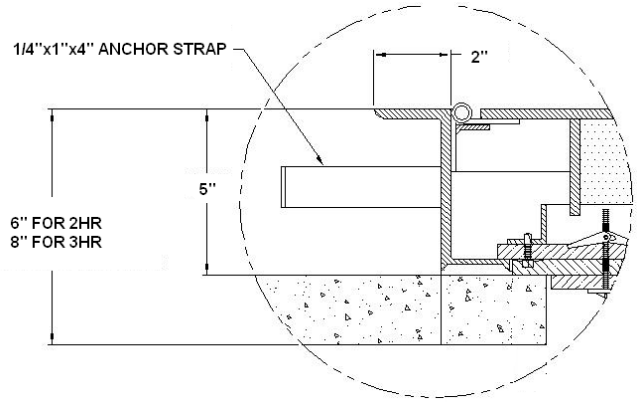

1. Special care is required when handling and installing floor doors. Please make sure that all framework and doors are supported during transport and installation to insure against bending or racking of the floor door.

2. Floor doors for concrete pour applications are provided with ¼" x 1" x 4" masonry anchors as shown. Bend the anchors away from the frame, prior to installing the units.

3. Set the units into position over the desired opening area. Secure the hatch into the desired area making sure not to interfere with the operation of the hatch.

4. Reference the options below and pour concrete to the top edge of the frame. Level the concrete to finish flush with the top of the flange of the floor door.

5. Allow the concrete to cure for 7 days prior to operating the floor door. Operating the hatch prior may crack the concrete.

6. Open and inspect the floor door(s) for excess concrete that may have seeped into the hinges, latch or other areas. Remove any concrete to ensure smooth operation.

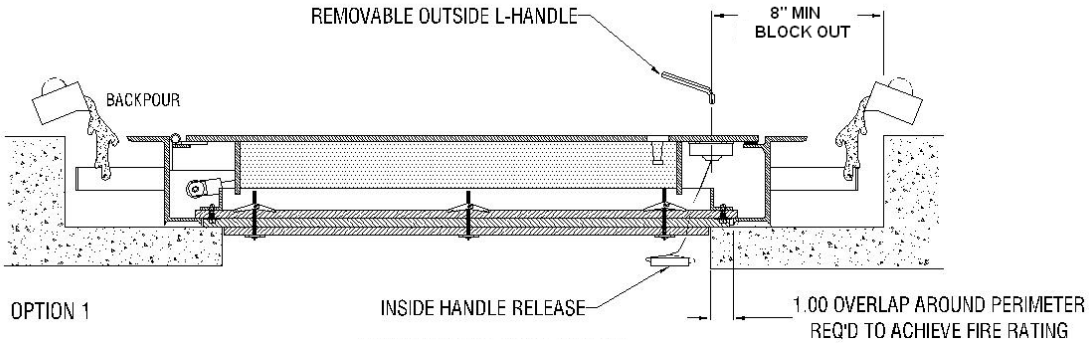

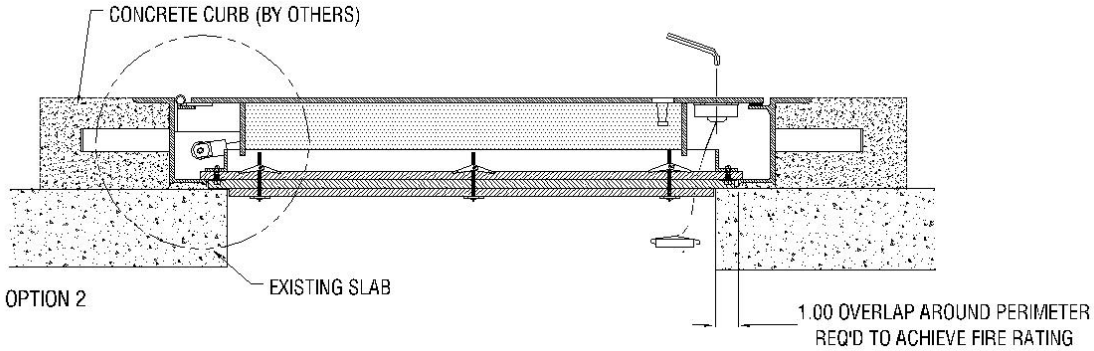

Installation in existing concrete floor openings

1. Special care is required when handling and installing floor doors. Please make sure that all framework and doors are supported during transport and installation to insure against bending or racking of the floor door.

2. Floor doors for existing concrete floor openings are provided with 3/8" diameter holes along the frame, as shown. Mounting hardware is provided by others.

3. To maintain the fire rating, 5 layers of 5/8" drywall are required as shown. One layer is required to be mounted between the wood and metal frame of the floor door.

A minimum depth of 6" is required to retain a 2HR rating
A minimum depth of 8" is required to retain a 3 HR rating.

4. For bolt-in installation in concrete, position floor door into existing opening and mark where fastener holes are located on the mounting surface.

For concrete, 5/16" anchor bolts are recommended.

5. Operate- open and close the door to ensure proper functionality.

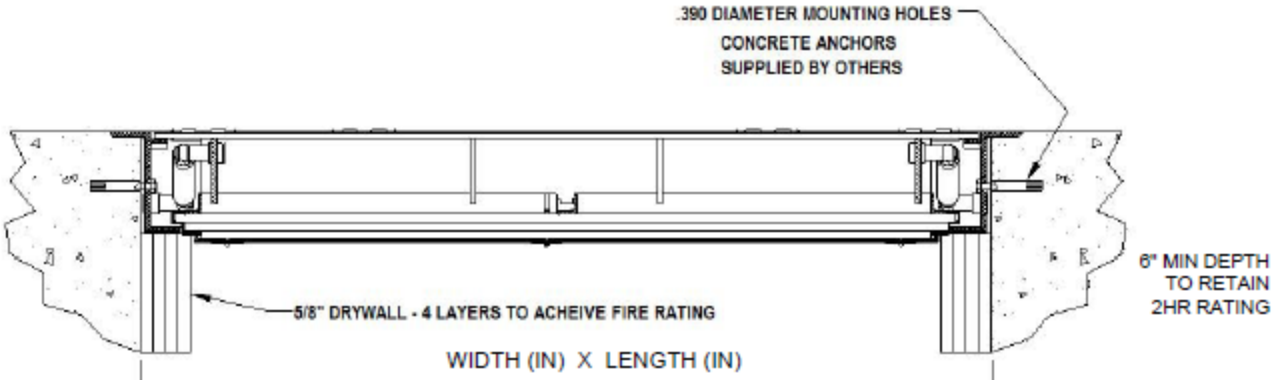

Installation in existing wood floor openings

1. Special care is required when handling and installing floor doors. Please make sure that all framework and doors are supported during transport and installation to insure against bending or racking of the floor door.

2. Floor doors for existing wood floor openings are provided with 3/8” diameter holes along the frame, as shown.

3. To maintain the fire rating, 5 layers of 5/8” drywall are required as shown. One layer is required to be mounted between the wood and metal frame of the floor door.

A minimum depth of 6” is required to retain a 2HR rating
A minimum depth of 8” is required to retain a 3 HR rating.

4. Set the units into position over the desired opening area. Secure the floor door into the desired area using hardware, provided by others. Make sure the anchorage devices do not to interfere with the operation of the hatch.

For wood installations, 5/16” lag bolts are recommended.

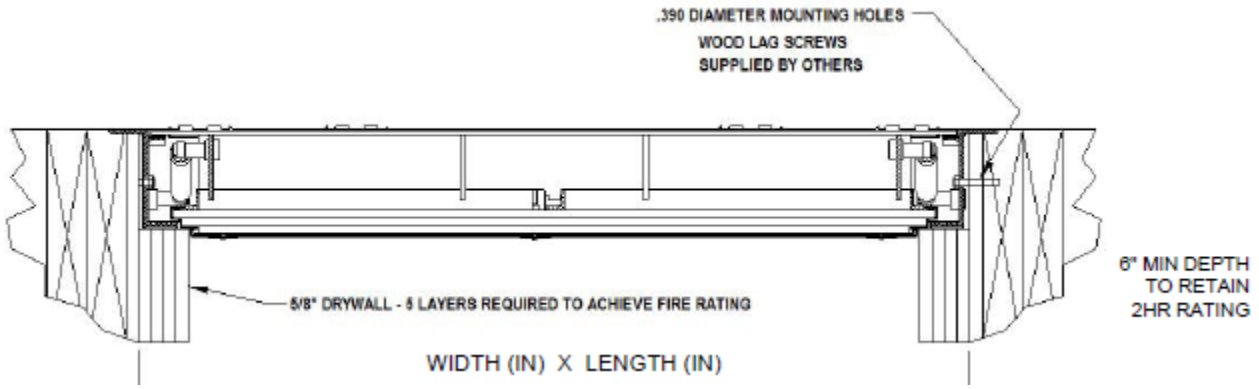

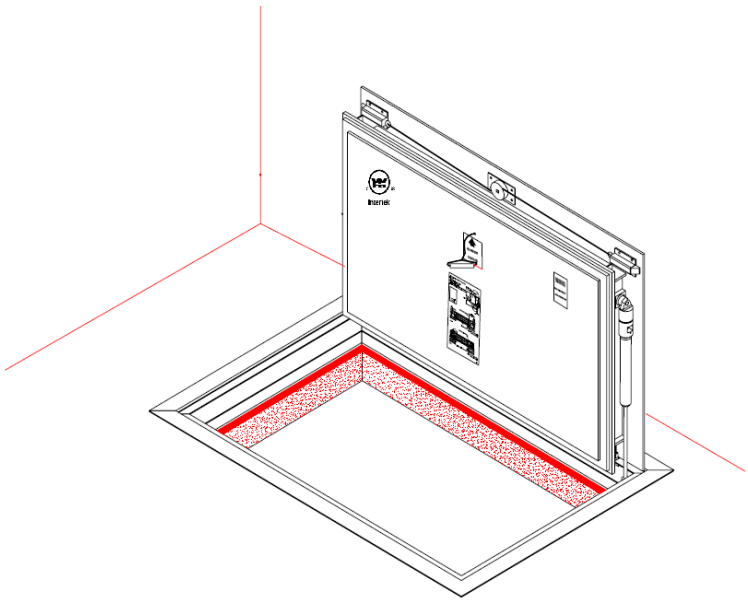

Operation:

Fire Rated floor doors are designed and built for years of dependable access. The basic components for door operation include turn handle latches, compression springs, stainless steel hinges and a locking hold open arm as detailed:

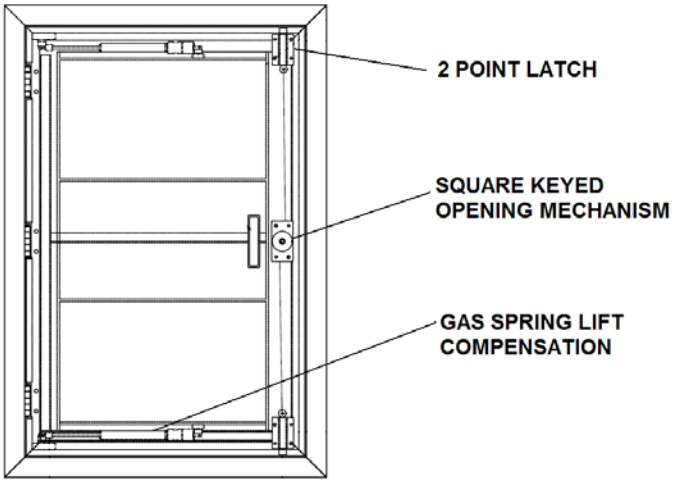

- Latch: Two point slam latch with interior pull release handle, and exterior L-handle key.
- Drop down lifting handle with removable square key L handle opening mechanism

- Spring: Gas springs to ensure ease of opening and closing during use.
    - Optional Self Closing Mechanism- integrated in spring assembly
- Hinge: Stainless Steel hinges

Springs with optional self closing mechanism at 165F

Maintenance:

-Floor doors should be manually operated once a year to check performance.

-Lubricate moving parts such as springs, hinges, and latches with a silicone spray lube as required to maintain a smooth opening and closing of the door. Do not over grease. Do not use regular lubricating oil as it can attract dust and grit.

-Non-moving parts can be cleaned with a mild soap or dishwashing detergent and water solution.

-Gaskets can be cleaned with a clean, damp, lint-free cloth. Do not apply mineral oils, vinyl dressings, or other lubricants to the gasket as they can cause the gasket to break down over time.

-If any questions arise during the operation or maintenance of the products, please feel free to call our toll-free number for assistance, 1-800-547-2635.