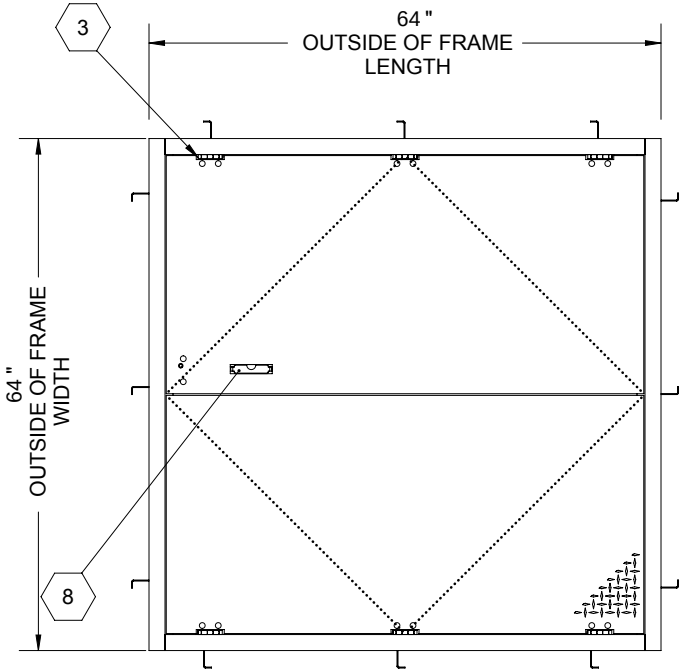

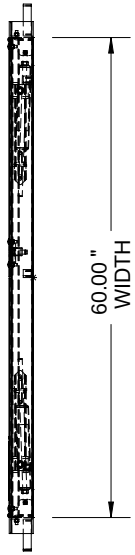

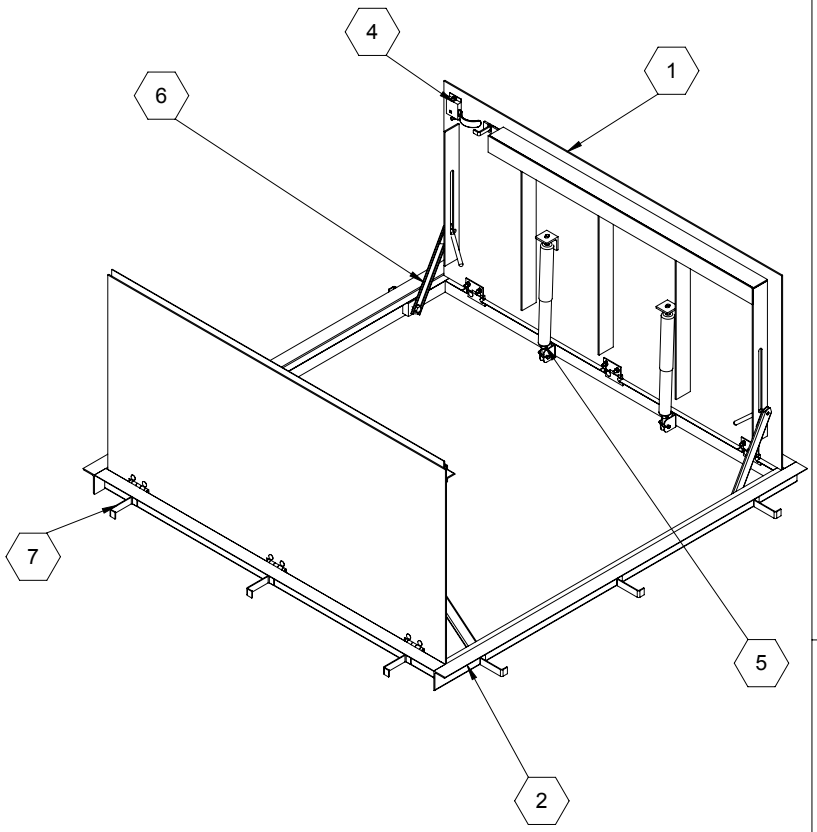

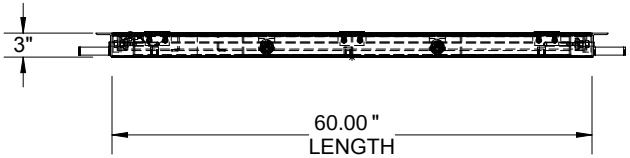

SPECIFICATIONS:

1. **DOOR:** STEEL, 3/16" DIAMOND PLATE, GRAY PRIMER COAT WITH A LIVE LOAD OF 300 PSF WITH A MAXIMUM DEFLECTION OF L/160
2. **FRAME:** STEEL, 3/16" ANGLE, GRAY PRIMER COAT
3. **HINGES:** TYPE 316 STAINLESS STEEL
4. **SLAM LATCH:** TYPE 316 STAINLESS STEEL WITH INSIDE LEVER HANDLE AND OUTSIDE REMOVABLE 5/16" SQUARE L HANDLE
5. **COUNTER-BALANCE SPRING:** TYPE 17-7 STAINLESS STEEL SPRING ENCLOSED IN A TYPE 316 STAINLESS STEEL TELESCOPING TUBE
6. **HOLD-OPEN ARM:** TYPE 316 STAINLESS STEEL WITH RED VINYL GRIP HANDLE
7. **ANCHOR:** 4" CONCRETE ANCHOR STRAPS PROVIDED
8. **FLUSH LIFTING HANDLE:** TYPE 316 STAINLESS STEEL

FLOOR DOOR SIZE:
60 " (WIDTH) x 60 " (LENGTH)

CLEAR UNOBSTRUCTED OPENING:
53 " (WIDTH) x 56 " (LENGTH)

OPENING:
60 " (WIDTH) x 60 " (LENGTH)

PROPRIETARY AND CONFIDENTIAL: THE INFORMATION CONTAINED IN THIS DRAWING IS THE SOLE PROPERTY OF BABCOCK DAVIS. ANY REPRODUCTION IN PART OR AS A WHOLE WITHOUT THE WRITTEN PERMISSION OF BABCOCK DAVIS IS PROHIBITED. THIS IS A GENERIC SHOP DRAWING AND MAY NOT BE AN ACTUAL REPRESENTATION OF THE FINAL PRODUCT.

PROJECT:					
ARCHITECT:					
CONTRACTOR:					
QTY:					
PART#:				**BFDEPP 60 X 60 DAL**	
Babcock-Davis Always right there.® 9300 73rd Avenue North Brooklyn Park, MN 55428				TITLE: Floor Door, Non-Drainable, Dbl Dr, 316 SST Hdw, Steel, Prime Coat, Pedestrian, Cast-In Anchors, Slam Latch Removbl L Hdl	
	NAME	DATE	SIZE	DWG. NO.	REV
DRAWN	JE	04/18/11	A	BFDEPP_X_DAL	A
RELEASED	DWO	04/18/11	WEIGHT: Varies		SHEET 1 OF 2

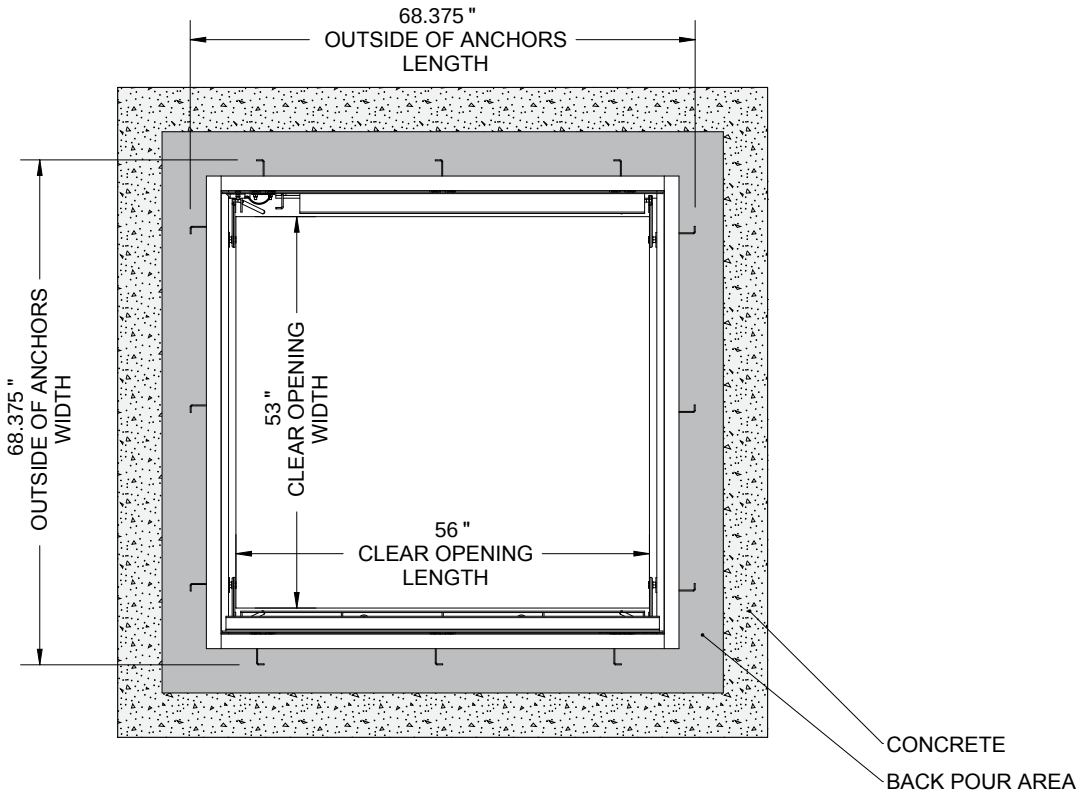

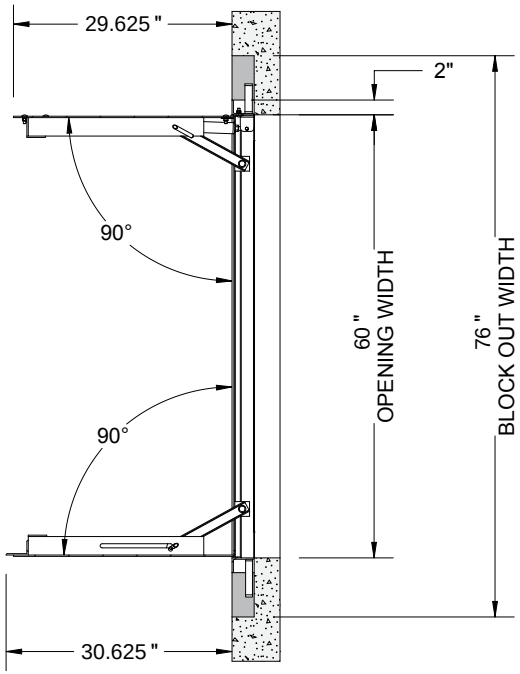

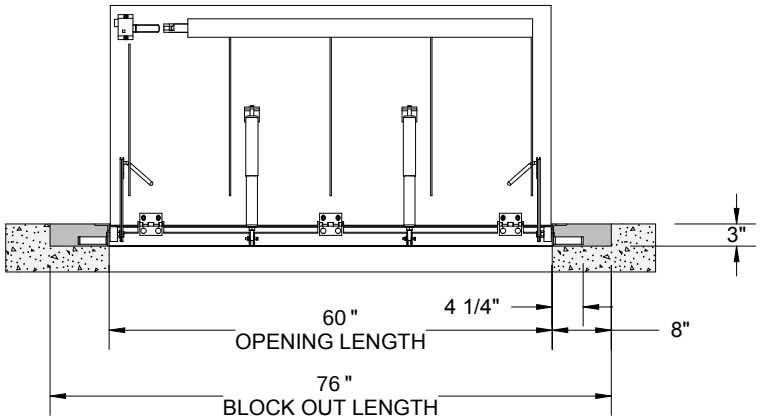

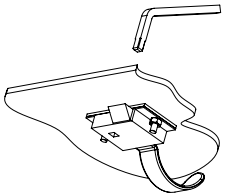

SLAM LATCH DETAIL

Babcock-Davis Always right there.® 9300 73rd Avenue North Brooklyn Park, MN 55428				TITLE: Floor Door, Existing Opening, Dbl Dr, 316 SST Hdw, Steel, Prime Coat, Pedestrian, Cast-In Anchors, Slam Latch Removbl L Hdl	
	NAME	DATE	SIZE	DWG. NO.	REV
DRAWN	JE	04/18/11	A	BFDEPP_X_DAL	A
RELEASED	DWO	04/18/11	WEIGHT: Varies		SHEET 2 OF 2

PROPRIETARY AND CONFIDENTIAL: THE INFORMATION CONTAINED IN THIS DRAWING IS THE SOLE PROPERTY OF BABCOCK DAVIS. ANY REPRODUCTION IN PART OR AS A WHOLE WITHOUT THE WRITTEN PERMISSION OF BABCOCK DAVIS IS PROHIBITED. THIS IS A GENERIC SHOP DRAWING AND MAY NOT BE AN ACTUAL REPRESENTATION OF THE FINAL PRODUCT.